romica engineering

Research Vessels

www.romica.co.uk

ROMICA winches & deck machinery specialists

DEEP DOWN WE CARE

Romica Engineering Limited is able to offer combinations of winch, A-frame and launch systems to suit a variety of seabed sampling and benthic measurement devices. Our range includes coring, CTD and CPT handling systems, side scan winches and seismic recording, and gun array handling systems.

For over 35 years the team behind **ROMICA** winches & deck machinery experts, have worked hard to build a reputation second to none in the business of supplying high quality specified winches, reliably and safely , to their diverse customer base worldwide. The hair may be thinning and grey but the desire and passion to constantly solve our customers biggest pay load management headaches has not diminished. If anything our resolve has strengthened as we find there are less and less companies worldwide who really understand how to design, develop and deliver a quality winch on time."

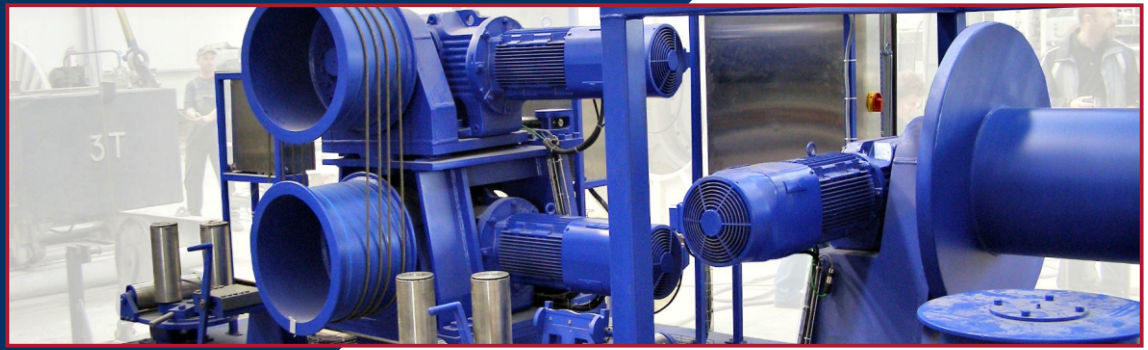

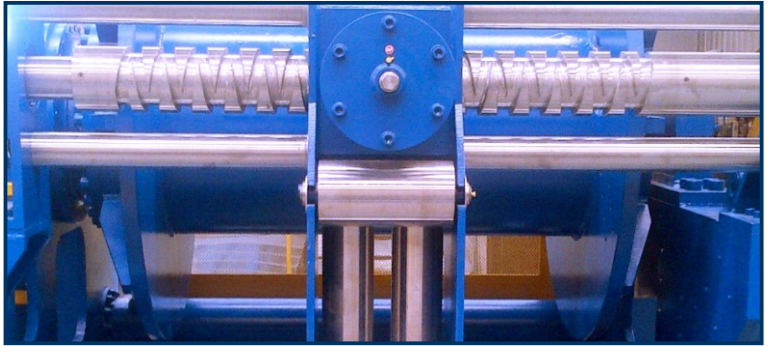

MOORING WINCHES 03

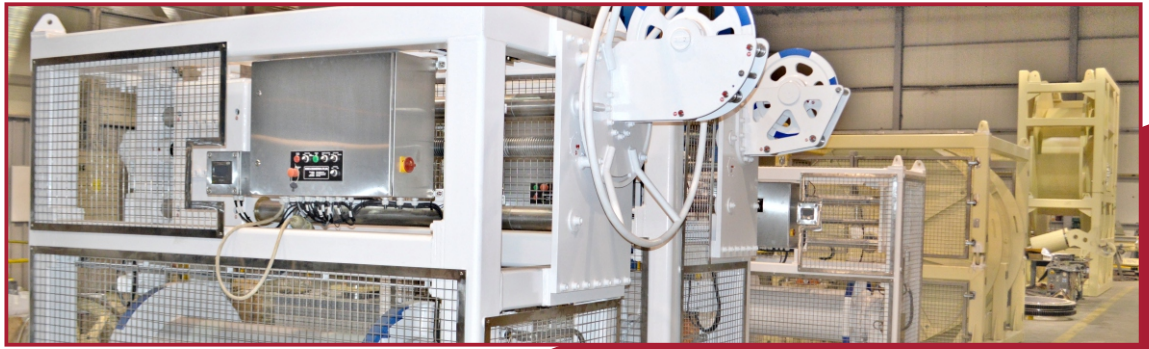

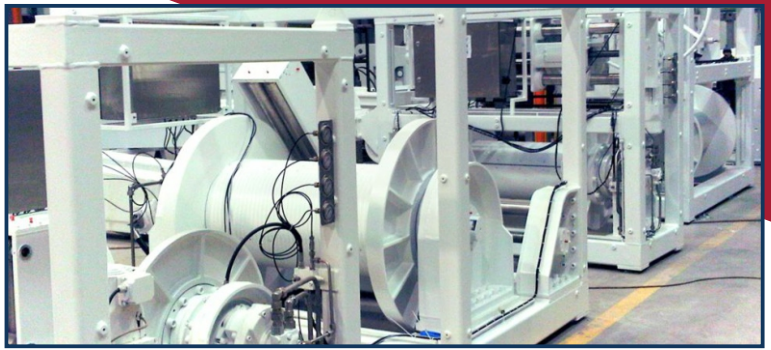

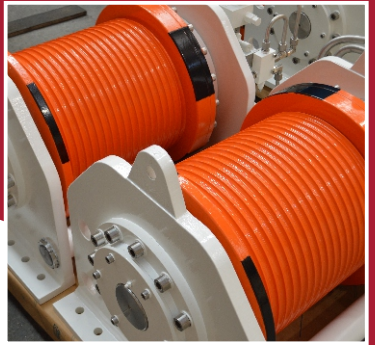

04 WINCHES

5.5
12.5
12.5

FUGRO EQUATOR

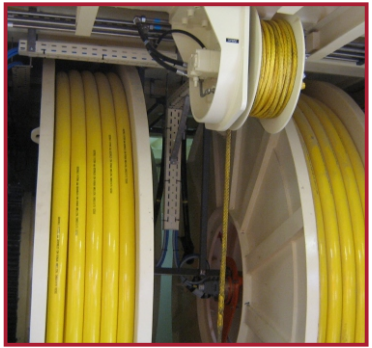

06 ARRAY HANDLING SYSTEMS

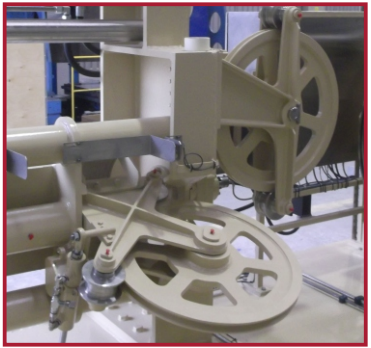

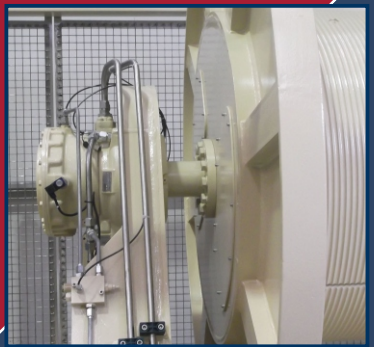

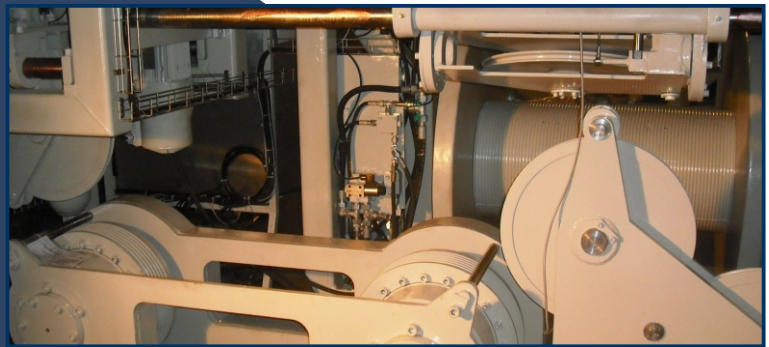

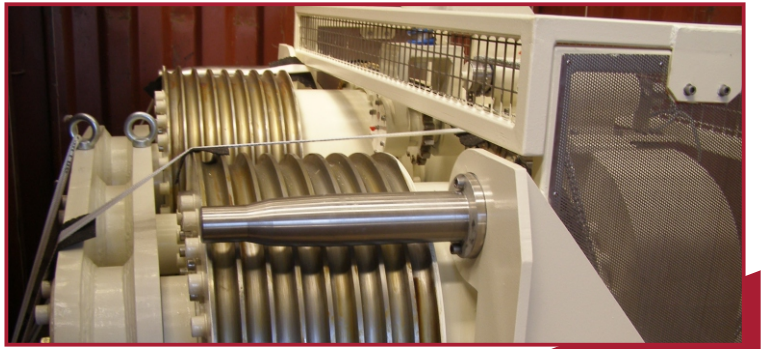

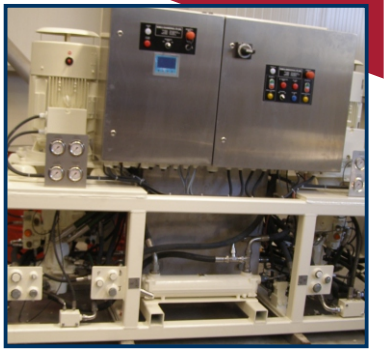

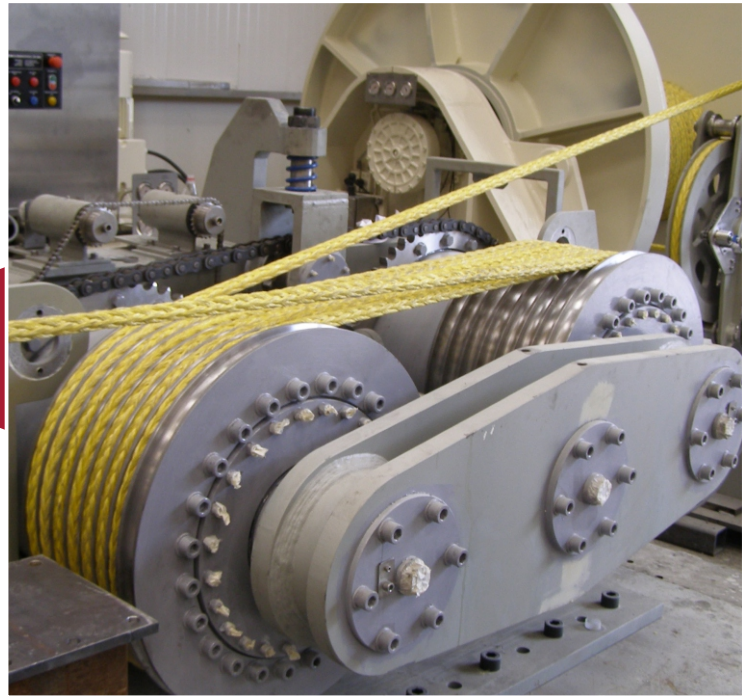

08 **DEEP TOW**
TRACTION WINCHES

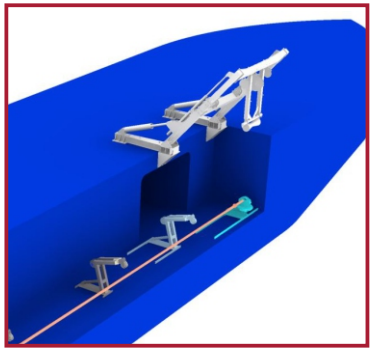

CORING SYSTEMS

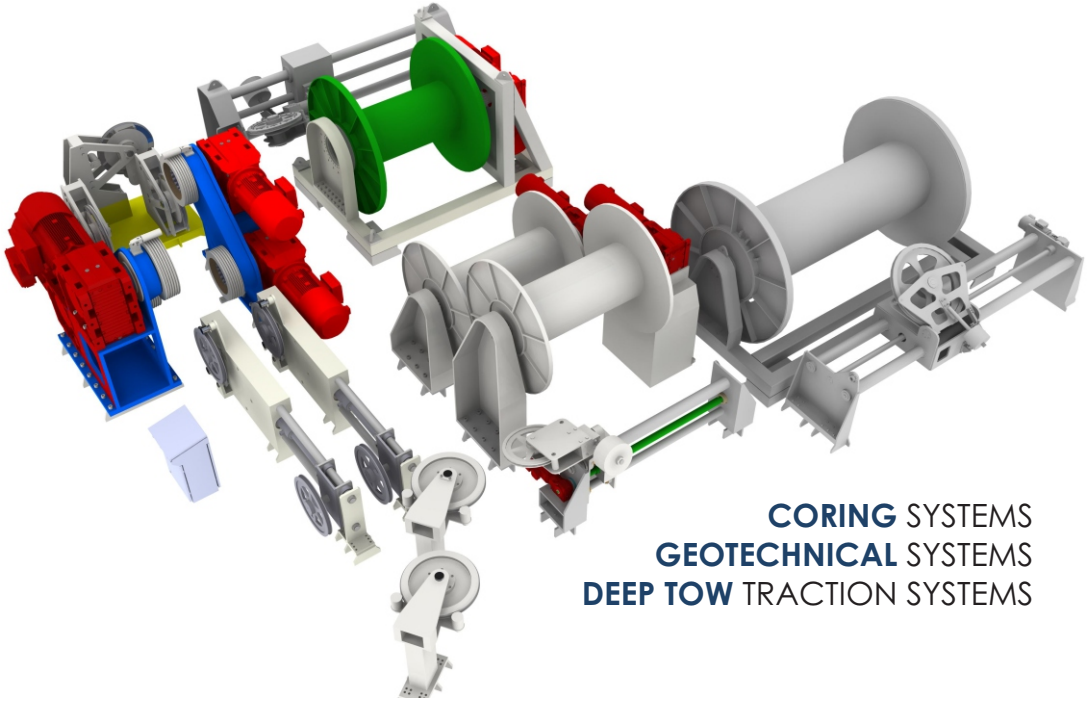

CORING SYSTEMS
GEOTECHNICAL SYSTEMS
DEEP TOW TRACTION SYSTEMS

TRACTION UNIT
DEEP TOW WINCHES

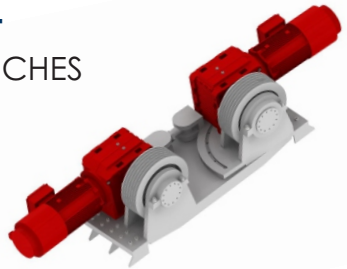

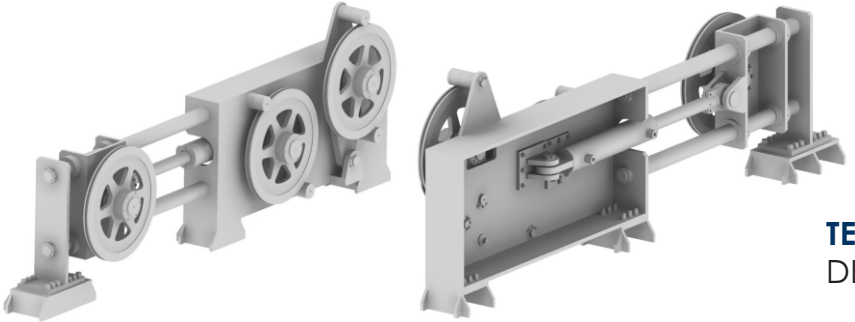

TENSION LIMITING SYSTEM
DEEP TOW WINCHES

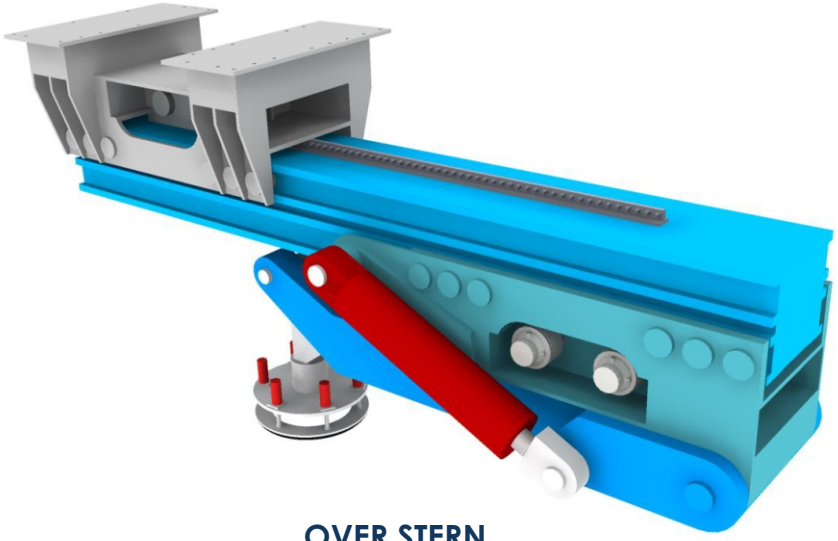

HANDLING
A-FRAME

OVER STERN
HANDLING BOOMS

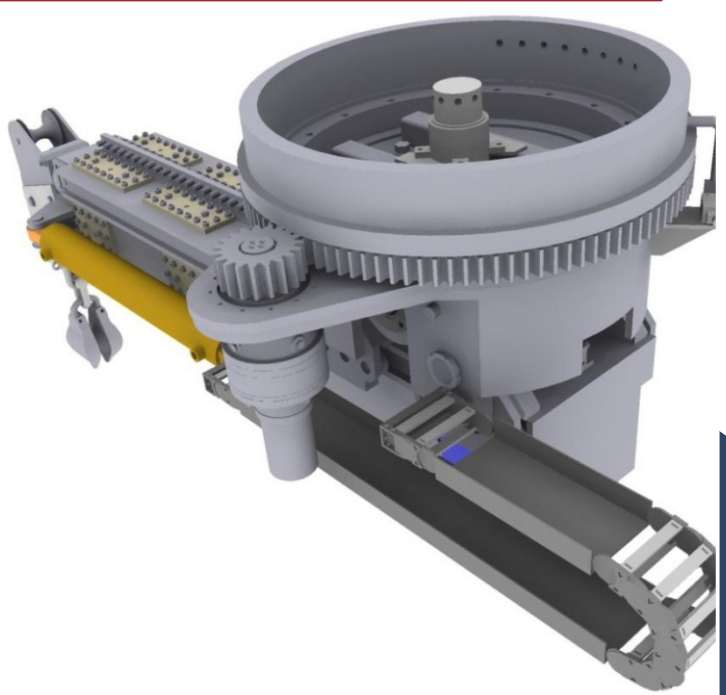

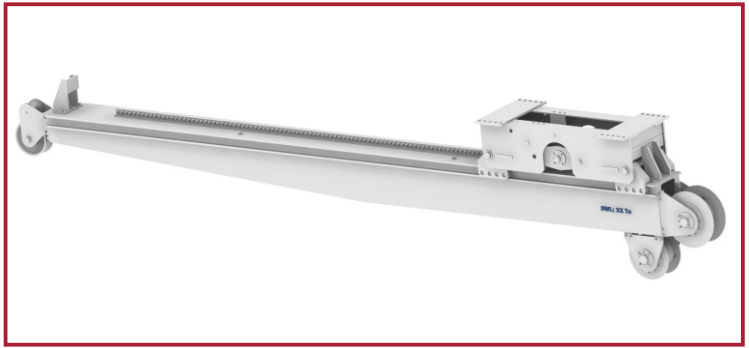

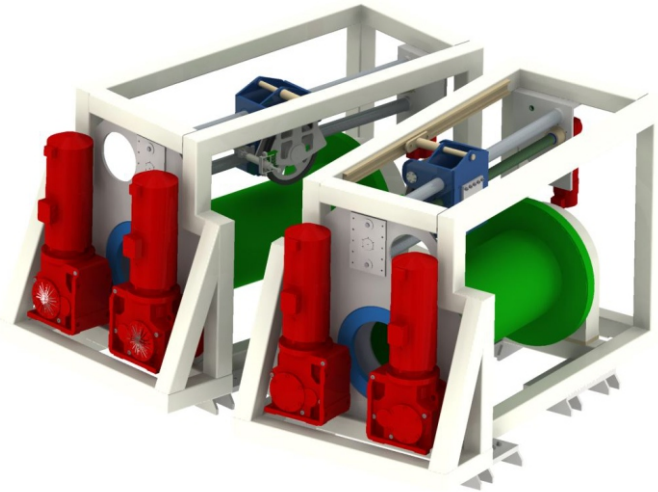

CTD Standard & CTD Clean
WINCHES

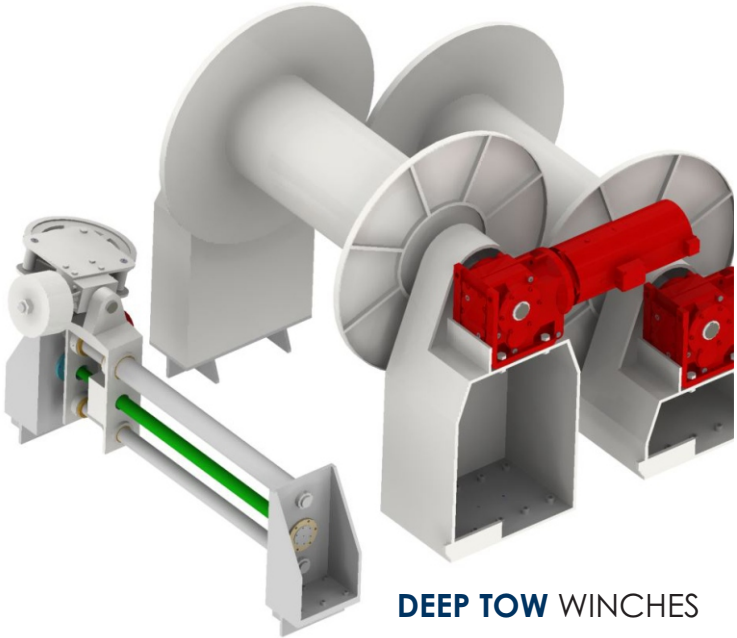

DEEP TOW WINCHES

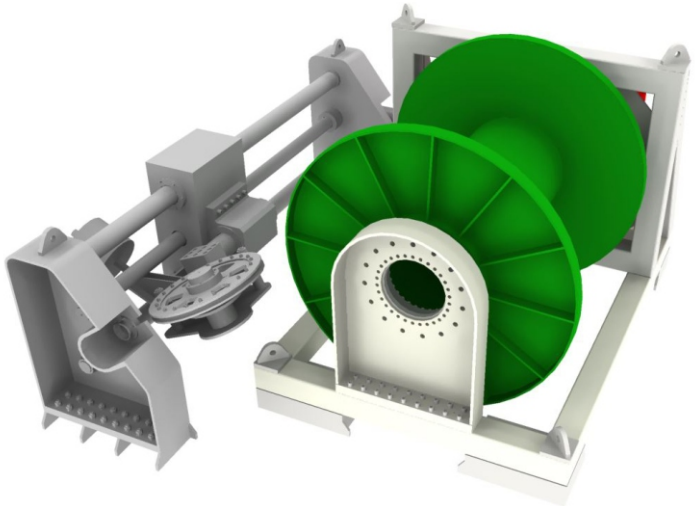

CORING WINCHES

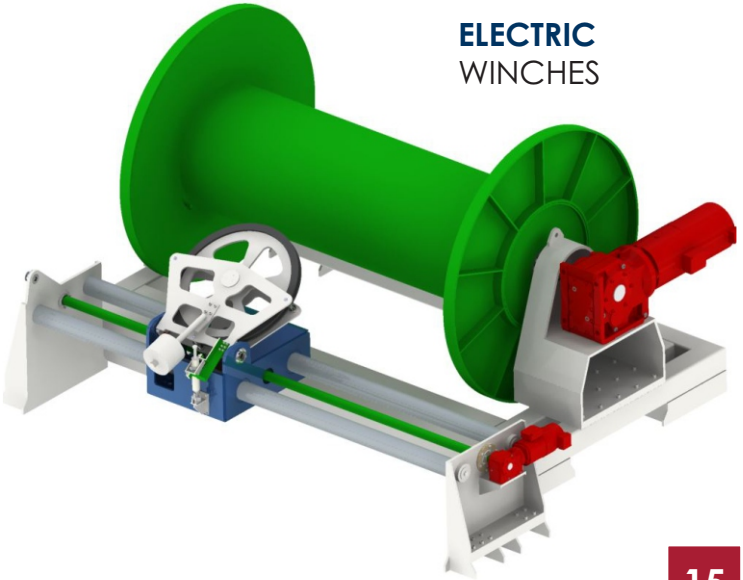

ELECTRIC
WINCHES

Winches, Hydraulic Systems, **Qualified Welding,** Mechanical Engineering, **Structural Engineering,** Electrical Engineering, **Installation,** **Commissioning,** Spares and Service Support, Steel Fabrication, Cranes, A Frames, DNV-GL Manufacture Under Survey, DNV-GL Design Approval, QA, ITP, **TESTING,** Special Projects, **Bespoke Design,** **Prototype Development,** CNC Machining, Product Certification, CE Marking, LARS

Romica Research Vessels

Romica winches & deck machinery specialists

Beck View Road, Grovehill Road, Beverley,
HU17 0JT; England
Tel/Fax: +44 (0)14 8285 3884;
Email: robert.turner@romica.co.uk
Web: www.romica.co.uk